Hi-MO X12

LR7-54WVH

495~525M

PRELIMINARY INFORMATION

LONGi SOLAR

Generational Leadership
Power Iteration Upgrade for Higher Energy Yield

Leading Innovation
Integrated Conductive Interconnection, Welding-free

Real Full Screen
Shingling+ Hidden Busbar Design

Ultimate Reliability
Enhanced Crack Resistance, Superior Moisture Protection

HPBC 2.0 | TaiRay | N-type

Monofacial Power Generation

15Y Product Warranty | **30Y** Performance Warranty

Complete System and Product Certifications

IEC61215, IEC 61730

ISO9001: Quality Management System

ISO14001: Environment Management System

ISO45001: Occupational Health and Safety

IEC62941: Quality System for PV Manufacturing

TÜVRheinland CERTIFIED | TÜV SÜD | CE | TIER 1 Bloomberg NEW ENERGY FINANCE

Hi-MO X12

LR7-54WVH

25.72%	0~3%	1%	0.35%	-40℃
MAX MODULE EFFICIENCY	POWER TOLERANCE	FIRST YEAR POWER DEGRADATION	YEAR 2-30 POWER DEGRADATION	LOWER OPERATING TEMPERATURE



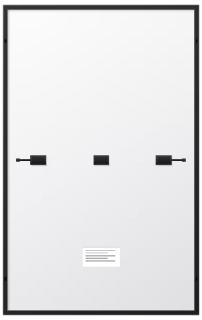

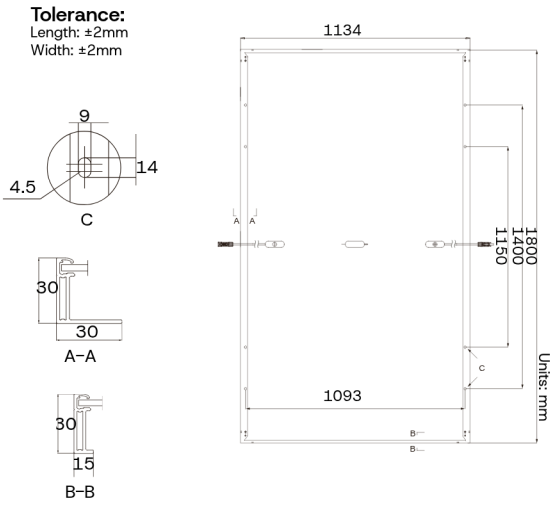

Mechanical Parameters

Cell Orientation	108 (6×18)
Junction Box	IP68, three diodes
Output Cable	4mm2, +400, -200mm/±1200mm length can be customized
Connector	EVO2A(Staubli) or PV-LR5(LONGi)
Glass	Single glass, 3.2mm coated tempered glass
Frame	Black anodized aluminum alloy frame
Weight	21.6 kg
Dimension	1800×1134×30mm
Packaging	37pcs per pallet / 222pcs per 20'GP / 888pcs per 40'HC

Electrical Characteristics

STC : AM1.5 1000W/m2 25℃ NOCT : AM1.5 800W/m2 20℃ 1m/s

Test uncertainty for Pmax ±3%

Module Type	LR7-54WVH-495M	LR7-54WVH-500M	LR7-54WVH-505M	LR7-54WVH-510M	LR7-54WVH-515M	LR7-54WVH-520M	LR7-54WVH-525M
Testing Condition	STC	STC	STC	STC	STC	STC	STC
Maximum Power (Pmax/W)	495	500	505	510	515	520	525
Open Circuit Voltage (Voc/V)	40.52	40.63	40.74	40.85	40.96	41.07	41.18
Short Circuit Current (Isc/A)	15.48	15.56	15.64	15.72	15.80	15.88	15.96
Voltage at Maximum Power (Vmp/V)	33.61	33.72	33.83	33.94	34.05	34.16	34.27
Current at Maximum Power (Imp/A)	14.73	14.83	14.93	15.03	15.12	15.22	15.32
Module Efficiency(%)	24.25	24.50	24.74	24.99	25.23	25.48	25.72

Operating Parameters

Operational Temperature	-40℃ ~ +85℃
Power Output Tolerance	0 ~ 3%
Maximum System Voltage	DC1500V (IEC)
Maximum Series Fuse Rating	25A
Nominal Operating Cell Temperature	45±2℃
Protection Class	Class II
Fire Rating	IEC Class C

Mechanical Loading

Min Designed Mechanical Load	1600Pa/1600Pa
Front Side Maximum Static Loading	5400Pa
Rear Side Maximum Static Loading	2400Pa
Hailstone Resistance	25mm Hailstone at the speed of 23m/s

Temperature Ratings (STC)

Temperature Coefficient of Isc	+0.050%/℃
Temperature Coefficient of Voc	-0.200%/℃
Temperature Coefficient of Pmax	-0.260%/℃

LONGi SOLAR

Specifications included in this datasheet are subject to change without notice. LONGi reserves the right of final interpretation.