Hi-MO X12

LR7-72WVD

660~690M

PRELIMINARY INFORMATION

LONGi SOLAR

Generational Leadership
Power Iteration Upgrade for Higher Energy Yield

Leading Innovation
Integrated Conductive Interconnection, Welding-free

Real Full Screen
Shingling+ Hidden Busbar Design

Ultimate Reliability
Enhanced Crack Resistance, Superior Moisture Protection

HPBC 2.0 | TaiRay | N-type

Monofacial Power Generation

15Y Product Warranty | **30Y** Performance Warranty

Complete System and Product Certifications

IEC61215, IEC 61730

ISO9001: Quality Management System

ISO14001: Environment Management System

ISO45001: Occupational Health and Safety

IEC62941: Quality System for PV Manufacturing

TÜVRheinland CERTIFIED | TÜV SÜD | CE | TIER 1 Bloomberg NEW ENERGY FINANCE

Hi-MO X12

LR7-72WVD

25.54%	0~3%	1%	0.35%	-40℃
MAX MODULE EFFICIENCY	POWER TOLERANCE	FIRST YEAR POWER DEGRADATION	YEAR 2-30 POWER DEGRADATION	LOWER OPERATING TEMPERATURE



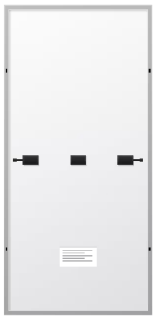

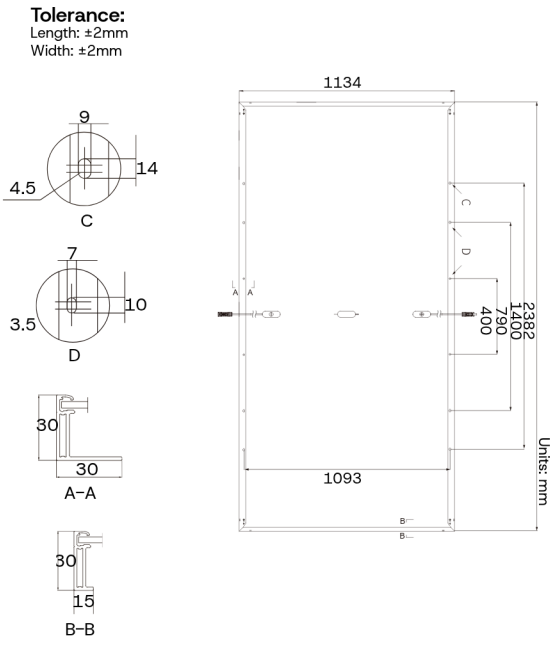

Mechanical Parameters

Cell Orientation	144 (6×24)
Junction Box	IP68, three diodes
Output Cable	4mm2, +400, -200mm/±1400mm length can be customized
Connector	EVO2A(Staubli) or PV-LR5(LONGi)
Glass	Dual glass, 2.0+2.0mm semi-tempered glass
Frame	Anodized aluminum alloy frame
Weight	32.5 kg
Dimension	2382×1134×30mm
Packaging	36pcs per pallet / 144pcs per 20'GP / 720pcs per 40'HC

Electrical Characteristics

STC : AM1.5 1000W/m2 25℃ NOCT : AM1.5 800W/m2 20℃ 1m/s

Test uncertainty for Pmax ±3%

Module Type	LR7-72WVD-660M	LR7-72WVD-665M	LR7-72WVD-670M	LR7-72WVD-675M	LR7-72WVD-680M	LR7-72WVD-685M	LR7-72WVD-690M
Testing Condition	STC	STC	STC	STC	STC	STC	STC
Maximum Power (Pmax/W)	660	665	670	675	680	685	690
Open Circuit Voltage (Voc/V)	53.94	54.04	54.14	54.24	54.34	54.44	54.54
Short Circuit Current (Isc/A)	15.48	15.55	15.62	15.69	15.76	15.83	15.90
Voltage at Maximum Power (Vmp/V)	44.69	44.79	44.88	44.98	45.08	45.18	45.28
Current at Maximum Power (Imp/A)	14.77	14.85	14.93	15.01	15.09	15.16	15.24
Module Efficiency(%)	24.43	24.62	24.80	24.99	25.17	25.36	25.54

Operating Parameters

Operational Temperature	-40℃ ~ +85℃
Power Output Tolerance	0 ~ 3%
Maximum System Voltage	DC1500V (IEC)
Maximum Series Fuse Rating	25A
Nominal Operating Cell Temperature	45±2℃
Protection Class	Class II
Fire Rating	IEC Class C

Mechanical Loading

Min Designed Mechanical Load	1600Pa/1600Pa
Front Side Maximum Static Loading	5400Pa
Rear Side Maximum Static Loading	2400Pa
Hailstone Resistance	25mm Hailstone at the speed of 23m/s

Temperature Ratings (STC)

Temperature Coefficient of Isc	+0.050%/℃
Temperature Coefficient of Voc	-0.200%/℃
Temperature Coefficient of Pmax	-0.260%/℃

LONGi SOLAR

Specifications included in this datasheet are subject to change without notice. LONGi reserves the right of final interpretation.